Dixon® Fire

Domestic Brass Industrial Fog Nozzles

The Right Connection®

High Pressure Industrial Fog Nozzle

FM

HPFN150

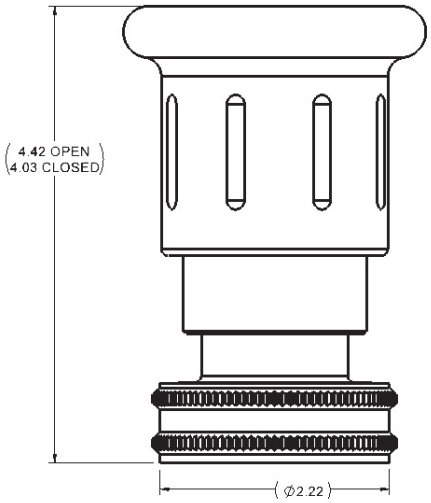

Specification

- Large one-piece rubber bumper with molded teeth
- Straight stream twist shut-off and flow-type change
- Cast and / or forged brass nozzle; maximum operating pressure: **300 PSI**
- Factory Mutual Approved for class A and B fires

Product Options

Nominal Size and layout

- ❑ 1-1/2”

Inlet Thread

- ❑ NPSH
- ❑ NST

Dixon Fire

325 Arbor Ct
Winchester, VA 22602
ph: 877.712.6179
fx: 800.283.4966
dixonvalve.com

© 2023 DVCC • BIFNFDC_823